AAVID THERMALLOY

Turbo Flow Liquid Cold Plates

RoHS ✓ Compliant

TURBO FLOW ULTRA HIGH PERFORMANCE COLD PLATES FOR POWER APPLICATIONS

Aavid Thermalloy Turbo Flow cold plates are designed for engineers looking to cool the latest high performance IGBTs. Turbo flow plates increase the surface area in contact with the cooling fluid by using unique flow paths thereby increasing thermal transfer performance. The cold plate components are vacuum brazed together to form leak free joints. Aavid Turbo Flow cold plates offer superior thermal performance with a lower pressure drop than other cold plates resulting in less costly fluid circulation systems.

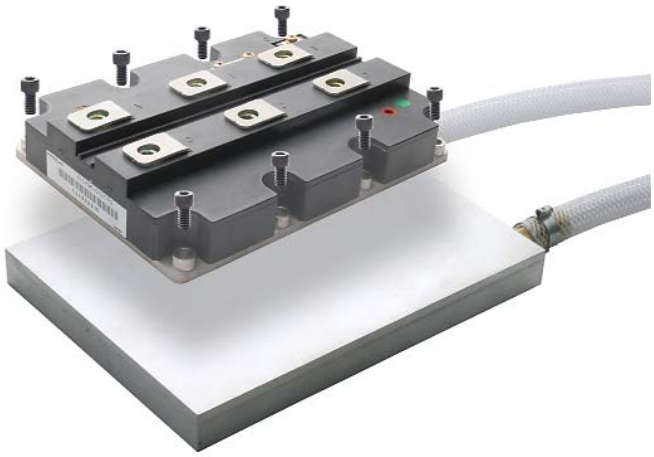

CRITICAL APPLICATION NEED:

- *Cost/performance value*
- *Leak free operation*
- *Thermal performance*

FEATURES AND BENEFITS:

- *Excellent thermal performance with lower pressure drop than other designs saves on system costs*
- *Brazed construction results in a rugged leak free solution*
- *Channels can be configured to put the fluid path where needed for the best thermal performance*

ORDERING INFORMATION:

Part Number	Finish	Figure
413000U00609G	Unfinished	1
Custom Configurations		2

Contact Aavid Thermalloy Application Engineering for assistance.

AAVID THERMALLOY

Turbo Flow Liquid Cold Plates

RoHS ✓ Compliant

SPECIFICATIONS:

- *Plate: Aluminum*
- *Cover Plate Material: Aluminum*
- *Joints: Vacuum Brazed*
- *Finish: Aavid "wash" Standard*

AVAILABLE OPTIONS:

- *Finishes: AavSHIELD, AavSHIELD³, Tin Plate, Electroless Nickel*
- *Sizes: Custom sizes available see Figure 2 for details*

Contact Aavid Thermalloy Applications Engineering Department when ordering custom configurations.

PERFORMANCE:

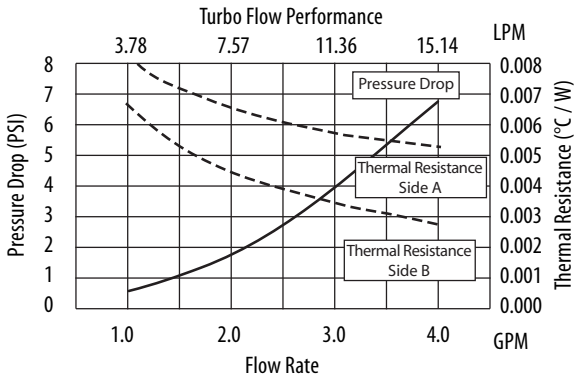

Heat source size: 244.5cm² (37.91in²)

MECHANICAL OUTLINE:

Figure 1

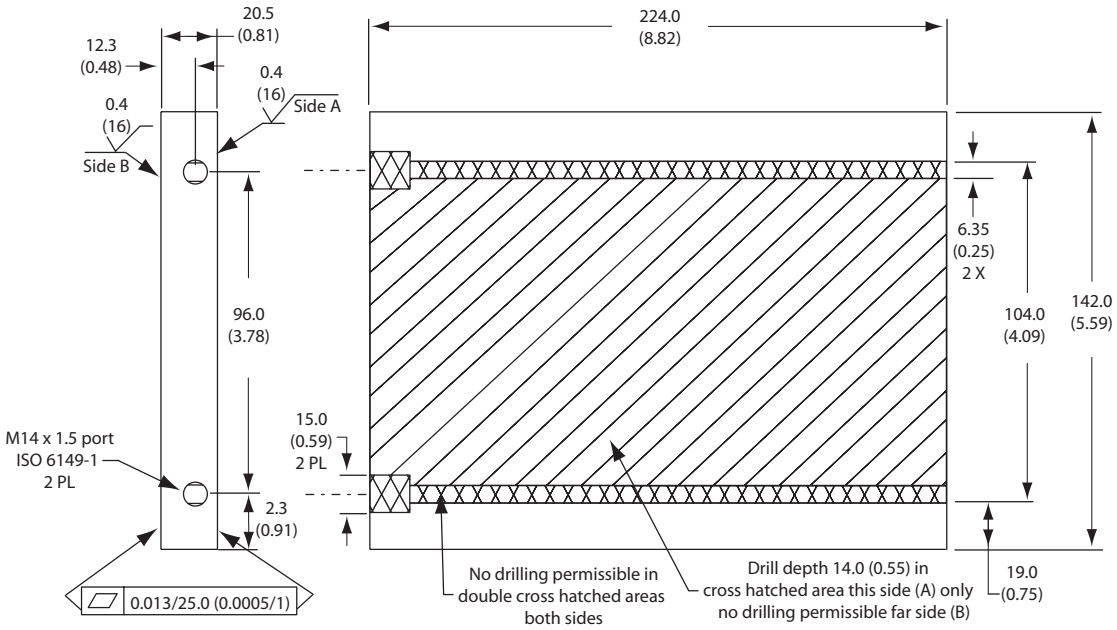

Dimensions as shown are mm (inches)

AAVID THERMALLOY

Turbo Flow Liquid Cold Plates

RoHS ✓ Compliant

CUSTOM DESIGN GUIDELINES:

Figure 2

Table 1: Available Adapters

ISO to Barb
ISO to Male NPT
ISO to Flare

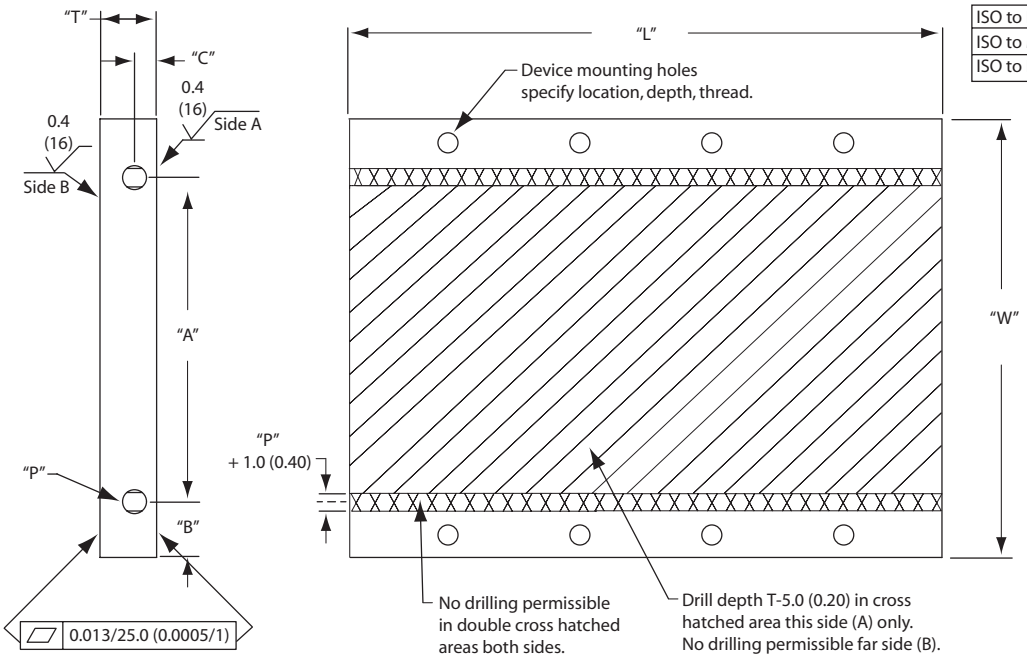

Dimensions as shown are mm (inches)

Standard Tolerances

Lead-in Dimensions	± 0.25 (0.01)
Overall Dimensions	± 0.50 (0.02)
Feature to Feature	± 0.13 (0.005)

DIM	Description	Min	Max
A	Center line, port to port	25 (0.98)	"W" - ("P" + 2.0 (0.08))
B	Edge to port	1/2 "P" + 5.0 (0.2)	(W-A)/2
C	Mounting surface to centerline of port	1/2 "P" + 1.0 (0.04)	"H" - (1/2 "P" + 5.0 (0.20))
T	Plate thickness	14 (0.55)	50 (1.97)
L	Plate length	150 (5.91)	700 (27.56)
P	Port size and thread (metric, pipe, oring)	M8 (1/8NPT)	"T" -5.0 (0.20)
W	Plate width	75 (2.95)	400 (15.75)